Bimetal pipe Mounting Thermometers TBA Ø 72

Application	For temperature measurement on pipes
Temperature range	0 … 120°C 0 … 60°C –20 … 40°C
Accuracy	± 1% of full scale[1)]
Case	Black synthetic material, heat resistant, max. 110°C
Dial	White aluminium, black graduation, DIN 16 109 (NS 80), 16 128 Graduation according to catalogue sheet T0.305
Zero adjustment	At the back of the case, ± 4°C
Pointer	Aluminium, anodized in black
Window	Synthetic material
Mounting	Spring, for pipes 1…5″
Fitting position	Any, revolving mounting flange
Order No.	0 … 120°C **TBA 72/112.111/20T** 0 … 60°C **TBA 72/112.111/11T** –20 … 40°C **TBA 72/112.111/52T**

Note:
1) Test condition: bright steel pipe Ø 48 medium: water, alcohol for temperature less than 0°C

Mounting

The Pipe Thermometer TBA 72 can be mounted with the attached spring to pipes of diameter sizes 1 … 5″ in any possible angle or position. The mounting bracket has been designed to give optimum transmission of the heat from the pipe to the mesuring instrument and allows exact measurement without heat transmission paste.

Dimension

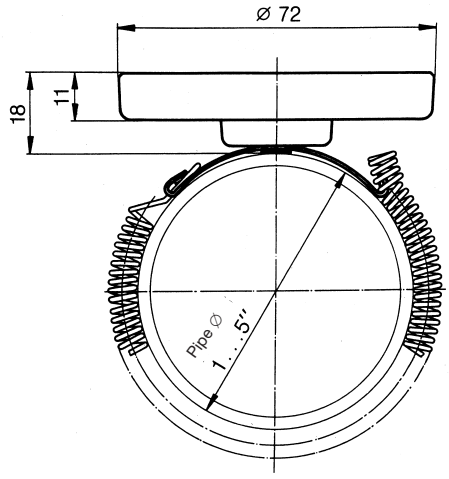

BOURDON HAENNI
made to measure

UK/2003-01-01 This data sheet may only be reproduced in full.