Flanged chemical seals series D820-824-825

Chemical seals with built-in flange

Flange facing and diaphragm of the same material (D824, D825)

Fluid temperature from -60 to +400°C

D820 DN > 25 mm

D820 DN ≤ 25 mm

Designed for process, chemical, petrochemical, petroleum, power, waste treatment industries, etc.

Used when the process monitored requires an interface protecting the measuring device from the fluid to be measured (viscosity, corrosion, contamination, temperature, etc.).

D824

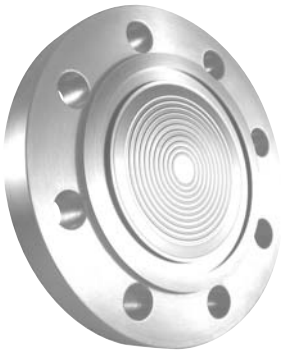

D825

D820 models for DN less than or equal to 25

Chemical seals with built-in flange, Raised face

ANSI		ISO and DIN		Min. M.R. in	Ø M
Class	DN	PN	DN	bar (20°C)	in mm
		10/16 to 25/40	15	0...6	38
			20	0...4	45
			25	0...1	54
150	1/2"			0...10	32
	3/4"			0...4	45
	1"			0...1.6	50

DN: Nominal diameter, PN: Nominal pressure in bar
Min. M.R.: Minimum measuring range in bar for a Ø 100 mm pressure gauge.

Maximum pressure according to the PN of the flange and its standardised pressure / temperature relation.

For lower measuring ranges, use series D425/D435.

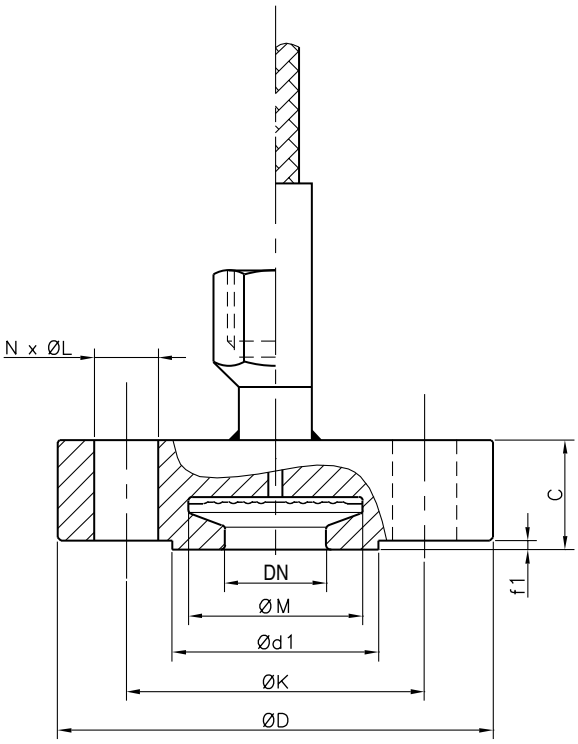

Specifications

Flange	Stainless steel 1.4404 (AISI 316L). Face RF
Diaphragm (Ø M)	Stainless steel 1.4435 (AISI 316L)
Option	Wetted parts: Hastelloy C276 (2.4819)
Connection	G 1/2 female thread
Capillary option	Standard length = 2 m; G 1/2 female connection Maximum length = 12 m

BOURDON HAENNI
made to measure

D820 models for DN greater than 25

Chemical seals with built-in flange, Raised face

	ANSI	ISO	DIN	Min. M.R. in bar		
DN	Class	PN	PN	Vacuum and pressure	Pressure	Ø M
32 / 1"1/4	15...2500	10...420	10...400	-1...9	0...6	38
40 / 1"1/2	15...2500	10...420	10...400	-1...5	0...4	45
50 / 2"	150...2500	10...420	10...400	-1...3	0...0.6	54
65 / 2"1/2	150...900	10...150	10.....160	-1...3	0...0.6	54
80 / 3"	150...1500	10...250	10...250	-1...0	0...0.16 Gauge P and absolute P.	89
100 / 4"	150...900	10...150	10...160	-1...0	0...0,16 Gauge P and absolute P.	95

DN: Nominal diameter, PN: Nominal pressure in bar
Min. M.R.: Minimum measuring range in bar for a Ø 100 mm pressure gauge.

Maximum pressure according to the PN of the flange and its standardised pressure / temperature relation.

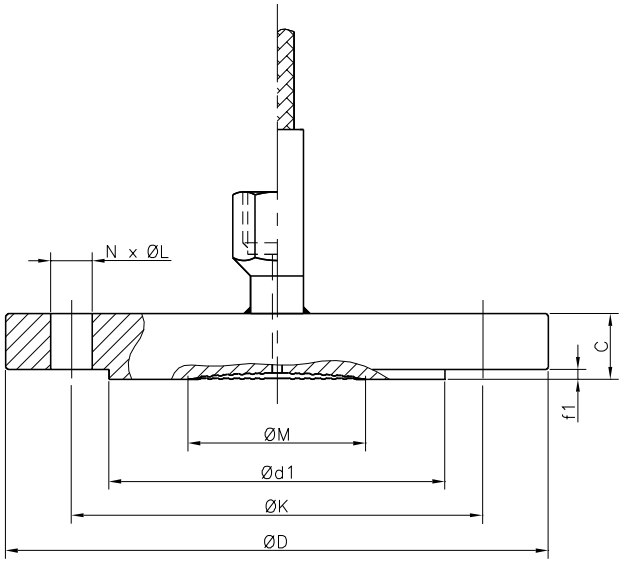

Specifications

Flange
Options
Stainless steel 1.4404 (AISI 316L). RF face.
Other flanges (as per standard JIS, RTJ face, tongue, groove, spigot, etc.).

Diaphragm (Ø M)
Options
Stainless steel 1.4435 (AISI 316L).
Hastelloy B2 (2.4617) ; Hastelloy C.276 (2.4819)
Hastelloy C4 (2.4610) ; Uranus B6 (1.4539)

Connection
Capillary option
G 1/2 female thread
Standard length = 2 m; G 1/2 female connection
Maximum length = 12 m

Diaphragm coating and flange facing (Ø d1)
PTFE thickness 0.02 mm
Halar thickness 0.2 mm
Gold thickness 15 µm

D824 models

Chemical seals with built-in flange, Raised face
Flange facing and diagram made of Tantalum or Hastelloy

	ANSI	ISO	DIN	Min. M.R. in bar		
DN	Class	PN	PN	Vacuum and pressure	Pressure	Ø M
50 / 2"	150...2500	10...420	10...400	-1...3	0...0.6	54
80 / 3"	150...1500	10...250	10...250	-1...0	0...0.16 Gauge P and absolute P.	89
100 / 4"	150...900	10...150	10...160	-1...0	0...0,16 Gauge P and absolute P.	95

DN: Nominal diameter, PN: Nominal pressure in bar
Min. M.R.: Minimum measuring range in bar for a Ø 100 mm pressure gauge.

Maximum pressure according to the PN of the flange and its standardised pressure / temperature relation.

Flange face: Raised face (RF)
Finish: Ra ≤ 0.4

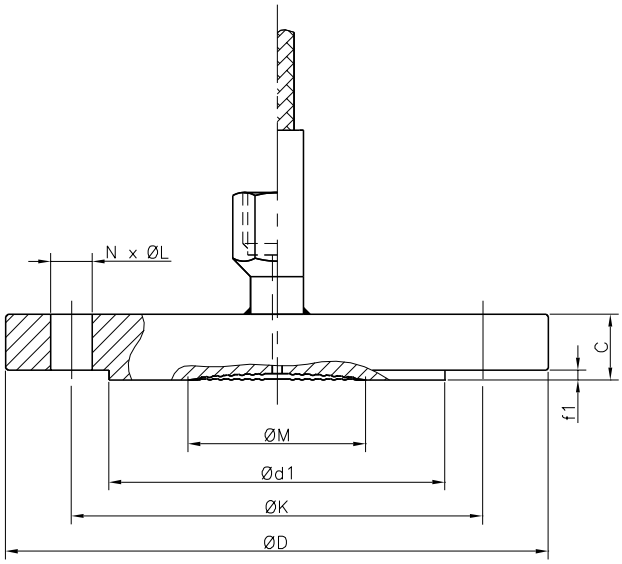

Specifications

Flange
Stainless steel 1.4404 (AISI 316L). RF face

Flange facing and diaphragm (Ø d1)
Hastelloy B2 (2.4617) ; Hastelloy C276 (2.4819) ; Hastelloy C4 (2.4610) ; Tantalum

Connection
Capillary option
G 1/2 female thread
Standard length = 2 m; G 1/2 female connection
Maximum length = 12 m

Max. fluid temperature
Option
Hastelloy = 250°C ; Tantalum = 100°C
Max. = 400°C

D825 models

Chemical seal with built-in flange, Process face made of special materials (Constructed on request, contact us)

	ANSI	ISO	DIN
DN	Class	PN	PN
50 / 2"	150...2500	10...420	10...400
80 / 3"	150...1500	10...250	10...250
100 / 4"	150...900	10...150	10...160

DN: Nominal diameter, PN: Nominal pressure in bar

Maximum pressure according to the PN of the flange and its standardised pressure / temperature relation.

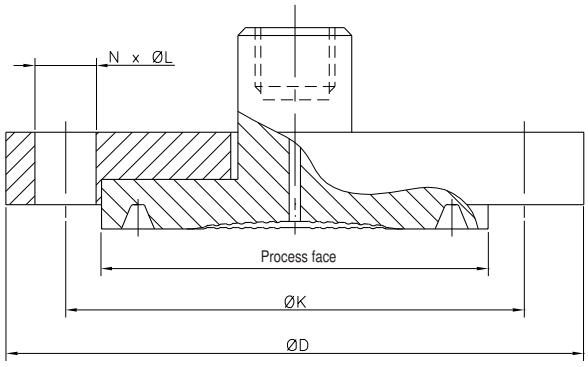

Specifications

Face in contact with the fluid to be measured (diaphragm and flange facing)
Hastelloy B2 (2.4617) ; Hastelloy C276 (2.4819)
Hastelloy C4 (2.4610);Titanium; Uranus B6 (1.4539)
Monel 400 (2.4360); Nickel (2.4066)

All types of face

Cleaning ring for mounting between flanges

	ANSI	ISO			
DN	Class	PN	D1	D2	Code
2"	150...2500	20 - 50 100 - 150 250 - 420	92	62	53102-01
3"			127	92	53102-02
4"			157	92	53102-03
50		10 - 16 25 - 40	102	62	53102-04
80			138	92	53102-05
100			162	92	53102-06

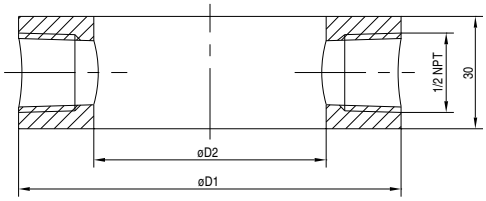

Specifications

Mounting Raised face (RF) or Flat face flanges

Material Stainless steel 1.4404 (AISI 316L)
Options Other materials (contact us)

Options Other types of face (RTJ) (contact us)
1/2 NPT plug (code 27446-03-00)

Diaphragm material

Code	Material	D820 DN ≤ 25	D820 DN > 25	D824	D825
2	Stainless steel (1.4435)	X	X		
3	Uranus B6 (1.4539)		X		X
5	Hastelloy B2 (2.4617)		X	X	X
6	Hastelloy C276 (2.4819)	X	X	X	X
A	Hastelloy C4 (2.4610)		X	X	X
7	Tantalum			X	
8	Titanium				X
9	Monel 400 (2.4360)				X
Option D824 High Temperature 400°C					
G	Hastelloy B2 (2.4617)			X	
H	Hastelloy C276 (2.4819)			X	
J	Hastelloy C4 (2.4610)			X	
K	Tantalum			X	

Chemical seal filling liquid

Code	Type of liquid
LRS0	No filling
LRS1	-15…150°C Standard liquid
LRS2	-60…150°C Low temperature liquid
LRS4	-15...150°C Liquid for oxygen and chlorinated products; Pmax. 150 bar at 20°C
LRS8	0…300°C Vacuum and absolute pressure
LRS9	-40…400°C High temperature liquid

Standardised flange dimensions

ISO or ANSI B16-5 FLANGES												
ISO	Code	ANSI	CODE	PN	Class	Ø D	C	Ø K	Ø L	N	f1	Ø d1
15	**C**	1/2	**2**	10/40		95	24	65	14	4	2	45
				20	150	89	24	60.3	15.8	4	1.6	34.9
20	**D**	3/4	**3**	10/40		105	26	75	14	4	2	58
				20	150	99	26	69.8	15.8	4	1.6	42.9
25	**E**	1	**4**	10/40		115	26	85	14	4	2	68
				20	150	108	26	79.4	15.8	4	1.6	50.8
32	**F**	1"1/4	**5**	10/16		140	16	100	18	4	2	78
				20	150	117	15.9	88.9	15.8	4	1.6	63.5
				25/40		140	18	100	18	4	2	78
				50	300	133	19	98.4	19	4	1.6	63.5
40	**G**	1"1/2	**6**	10/40		150	18	110	18	4	3	88
				20	150	127	17.5	98.4	15.8	4	1.6	73
				50	300	156	20.6	114.3	22.2	4	1.6	73
				100	600	156	28.8	114.3	22.2	4	6.4	73
				150/250	900/1500	178	38.2	123.8	28.5	4	6.4	73
50	**H**	2"	**7**	10/16		165	18	125	18	4	3	102
				20	150	152	19.1	120.6	19	4	1.6	92.1
				25/40		165	20	125	18	4	3	102
				50	300	165	22.4	127	19	8	1.6	92.1
				100	600	165	31.8	127	19	8	6.4	92.1
				150/250	900/1500	216	44.5	165.1	25.4	8	6.4	92.1
				420	2500	235	50.8	171.5	28.5	8	6.4	92.1
80	**K**	3"	**9**	10/16		200	20	160	18	8	3	138
				20	150	190	23.9	152.4	19	4	1.6	127
				25/40		200	24	160	18	8	3	138
				50	300	210	28.4	168.3	22.2	8	1.6	127
				100	600	210	38.2	168.3	22.2	8	6.4	127
				150	900	241	44.5	190.5	25.4	8	6.4	127
				250	1500	267	54.2	203.2	31.8	8	6.4	127
100	**L**	4"	**V**	10/16		220	22	180	18	8	3	158
				20	150	229	23.9	190.5	19	8	1.6	157.2
				25/40		235	26	190	22	8	3	162
				50	300	254	31.8	200	22.2	8	1.6	157.2
				100	600	273	44.5	215.9	25.4	8	6.4	157.2
				150	900	292	50.9	235	31.8	8	6.4	157.2

FLANGES as per DIN 2501									
DN	Code	PN	Ø D	C	Ø K	Ø L	N	f1	Ø d1
15	C	10/40	95	24	65	14	4	2	45
20	D	10/40	105	26	75	14	4	2	58
25	E	10/40	115	26	85	14	4	2	68
40	G	10/40	150	18	110	18	4	3	88
		63/100	170	26	125	22	4	3	88
		160	170	28	125	22	4	3	88
		250	185	34	135	26	4	3	88
50	H	10/40	165	18	125	18	4	3	102
		63	180	26	135	22	4	3	102
		100	195	28	145	26	4	3	102
		160	195	30	145	26	4	3	102
		250	200	38	150	26	8	3	102
80	K	10/16	200	20	160	18	8	3	138
		25/40	200	24	160	18	8	3	138
		63	215	28	170	22	8	3	138
		100	230	32	180	26	8	3	138
		160	230	36	180	26	8	3	138
		250	255	46	200	30	8	3	138
100	L	10/16	220	20	180	18	8	3	158
		25/40	235	24	190	22	8	3	162
		63	250	30	200	26	8	3	162
		100	265	36	210	30	8	3	162
		160	265	40	210	30	8	3	162

Flange face definition tables for chemical seals D820 DN > 25 and D825

ISO / ANSI flanges

ISO PN 6-10-16-25 and 40	ISO PN 20 and 50 ANSI Class 150/300	ISO PN 100-150-250-420 ANSI Class 600/900/1500/2500
Codes	**Codes**	**Codes**
A Flat face (type A)	G Raised face (type B1) (RF of 1.6)	R Raised face (type B2) (RF of 1.6)
B Raised face (type B)	H (wide) I (narrow) Male tongue (wide: type C1 - narrow: type C2)	H (wide) I (narrow) Male tongue (wide: type C1 - narrow: type C2)
C Male tongue (type C)	K (wide) L (narrow) Female groove (wide: type D1 - narrow: type D2)	K (wide) L (narrow) Female groove (wide: type D1 - narrow: type D2)
D Female groove (type D)	M (wide) N (narrow) Male spigot (wide: type E1 - narrow: type E2)	M (wide) N (narrow) Male spigot (wide: type E1 - narrow: type E2)
E Male spigot (type E)	O (wide) P (narrow) Female spigot (wide: type F1 - narrow: type F2)	O (wide) P (narrow) Female spigot (wide: type F1 - narrow: type F2)
F Female spigot (type F)	Q Ring joint face(type J)	Q Ring joint face (type J)

*Type A: compliant with NF E 29-203

Codes	DIN Flanges	
1	Shape E	Standard (DIN 2527)
2	Shape N	Double female recess (DIN 2512)
3	Shape F	Double male recess (DIN 2512)
4	Shape V13	(DIN 2513)
5	Shape R13	(DIN 2513)

Flange surface finishes

Raised faces:
ISO PN10-16-25-40: Ra 6.3 to 12.5
Other ISO PN and ANSI: Ra 3.2 to 6.3

Other finishes on request:
Stock Finish
Spiral Serrated
Concentric Serrated
Smooth Finish
Cold Water Finish

Other types of face: standard machining as per Standard

Codification

		Dxxxxxxx2xxxxx
Type of chemical seal	**1´ ... 4´ digit**	
D820 - D824 - D825		Dxxx
Mounting and type of Capillary	**5´ digit**	
Direct mounting		1
Stainless steel capillary with stainless steel protection		A
Stainless steel capillary with stainless steel protection and PVC sheath		B
Stainless steel capillary with reinforced stainless steel protection		C
Capillary length	**6´ digit**	
No Capillary (direct mounting)		0
Length 1 m		1
Length 1.5 m		E
Length 2 m		2
Length 3 m		3
Length 4 m		4
Length 4.5 m		F
Length 5 m		5
Length 6 m		6
Length 7 m		7
Length 8 m		8
Length 9 m		9
Length 10 m		A
Length 11 m		C
Length 12 m		D
Connection on measuring instrument side	**7´ digit**	
G 1/2 female		L
G 1/4 female		H
1/2 NPT female		N
1/4 NPT female		8
Flange standard	**8´ digit**	
ISO flange		1
ANSI B 16-5 flange		2
DIN 2501 flange		3
Flange material	**9´ digit**	
Stainless steel 316L (1.4404)		2
PN	**10´ digit**	
ANSI		
Class 150		1
Class 300		2
Class 600		3
Class 900		4
Class 1500		5
Class 2500		6
ISO		
PN 10		C
PN 16		D
PN 20		E
PN 25		F
PN 40		G
PN 50		H
PN 100		J
PN 150		K
PN 250		L
PN 420		M
DN	**11´ digit**	
ANSI (see table on page 4)		x
ISO (see table on page 4)		x
Flange face (1)	**12´ digit**	
See table («Definitions of flange faces» on page 5)		x
Diaphragm material	**13´ digit**	
See table («Diaphragm material» on page 3)		x
Diaphragm coating and flange facing	**14´ digit**	
No coating		0
PTFE 0.02 mm (D820 DN > 25 only)		1
HALAR 0.2 mm (D820 DN > 25 only)		4

(1) D824: Raised faces codes B or G only
D820: DN ≤ 25 raised faces codes B and G only

UK/08-2004 This data sheet must only be copied in full.